VHF UHF Helical Filter Specification Sheet

Customer Name		Temwell's Part No.	TTW3662B-928M
Approval No. /dated	201407201CD	Temwell's Print Name.	3662B 928M
Work Instruction No.	201407201CD	Date	Jul.17.2014

(1)Pin Position

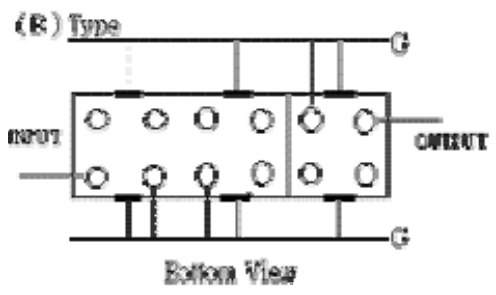

(2)Size Diagram

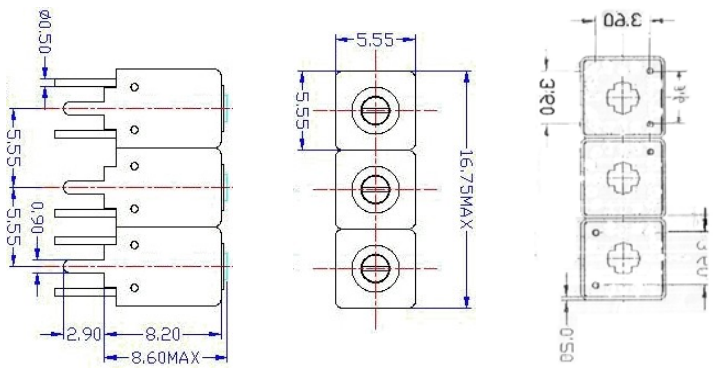

(3)Electric Character

Item		Specify		Performance	
Center Freq.(Fo) +/- 0.5 %			928 MHz	928	MHz
Insertion Loss		Typ.	5.0 dB	3.27	dB
-3 dB Bandwidth		Typ.	15 MHz	23.9	MHz
Sensitivity (Attenuation)	Fo - 100 MHz	Typ.	51 dBc	54	dBc
	Fo +100 MHz	Typ.	43 dBc	46	dBc
	Fo - ( )MHz	Typ.	dBc		dBc
	Fo +( )MHz	Typ.	dBc		dBc
Return Loss		Min.	12 dB	23.0.	dB
Ripple			< 1 dB		dB
Impedance		In / Out : 50 Ω		In / Out : 50 Ω	
(4)Torque for Tuning Screw		> 60gf • cm			

(5)Temperature Condition:

Operating Temperature	0℃ ~ +60℃
Storage Temperature	-20℃ ~ +70℃
(6)Input Power	> 0.5Watt

(7)Measuring Circuit: ※Easy to match Impedance S11/S22 50Ω by parallel with about(----)

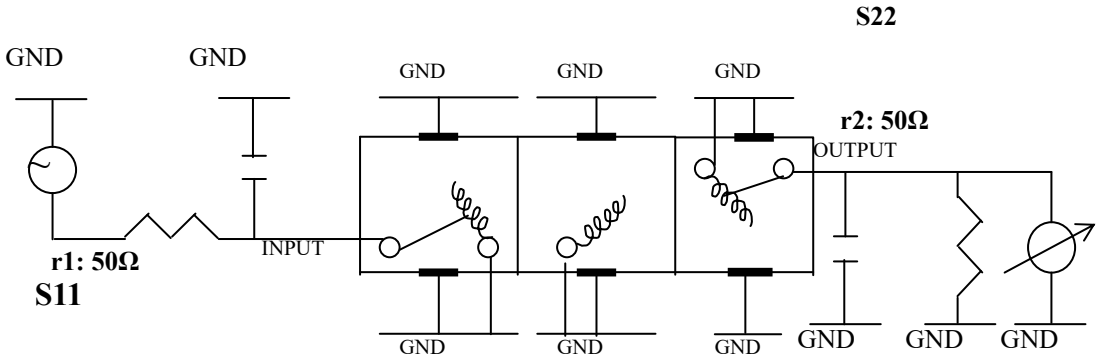

(Bottom View)

Approval	Supervisor	Designer	Aperture size
C.Y.Chang	C.K.Chang	C.S.Chang	5W3S(3.8*3.5)(3.62) 5HW024RB3

TEMWELL CORPORATION

Performance-TTW3662B-928M
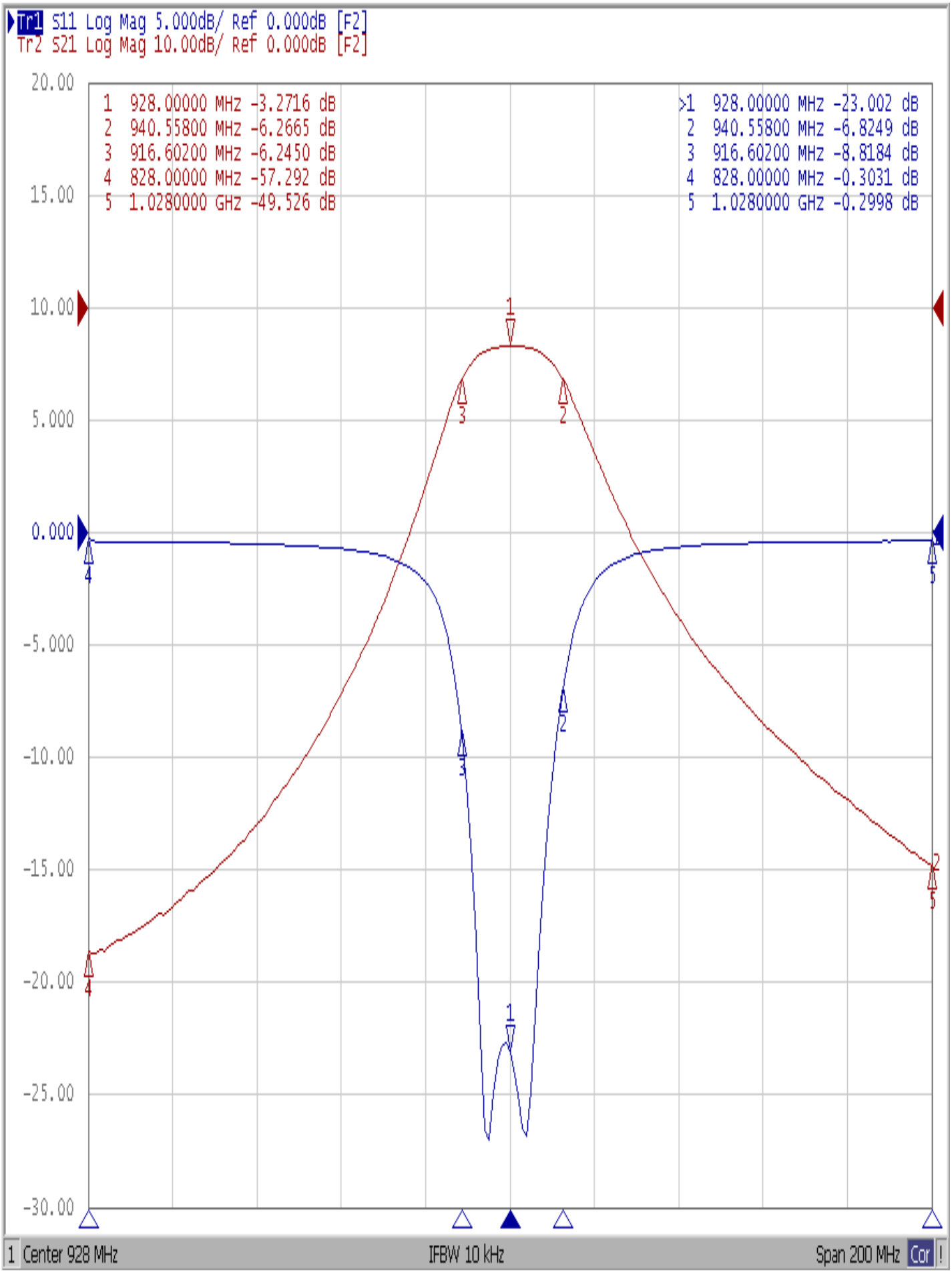
201407201CD