VHF UHF Helical Filter Specification Sheet

Customer Name		Temwell's Part No.	TT67478B-480M
Approval No. /dated	20107002DB	Customer Print Name	
Work Instruction No.	20107002DB	Date	

(1)Pin Position

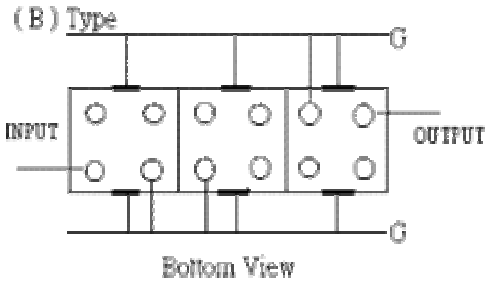

(2)Size Diagram

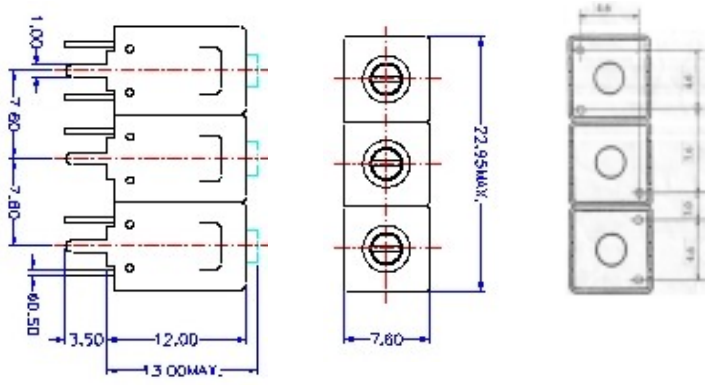

(3)Electric Character

Item		Specify		
Center Freq.(Fo) +/- 0.5 %			480	MHz
Tunable Range:			480±3	MHz
Insertion Loss		Typ.	4.0	dB
-3 dB Bandwidth		Typ.	30	MHz
Sensitivity (Attenuation)	Fo - 50 MHz	Typ.	22	dBc
	Fo + 50 MHz	Typ.	20	dBc
	Fo - ( )MHz	Typ.		dBc
	Fo +( )MHz	Typ.		dBc
Return Loss		Min.	12	dB
Ripple		<	1	dB
Impedance		In / Out : 50 Ω		
(4)Torque for Tuning Screw		> 100gf · cm		
(5)Temperature Condition:				
Operating Temperature		0℃ ～+60℃		
Storage Temperature		-20℃ ～+70℃		
(6)Input Power		> 1Watt		

(7)Measuring Circuit: ※Easy to match Impedance S11/S22 50Ω by parallel with about(0 pF) / (1 pF).

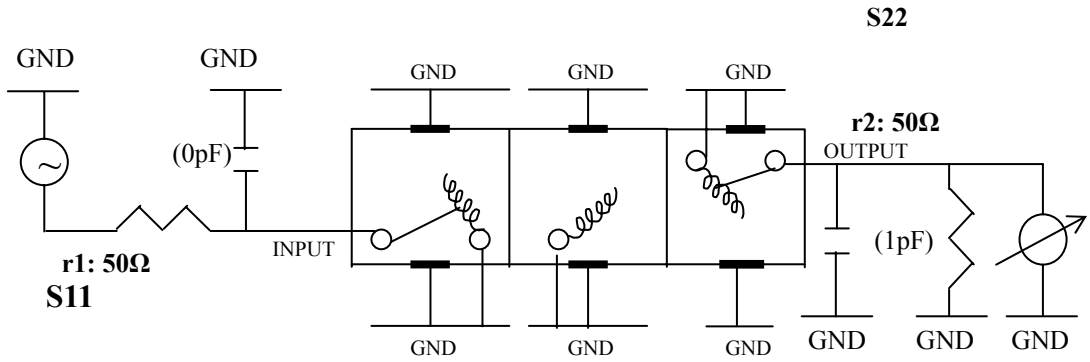

(Bottom View)

Approval	Supervisor	Designer	Aperture size
C.Y.Chang	C.S.Chang	C.S.Chang	7H3S(4*5.5)F 7H046LB4 聚 3

TEMWELL CORPORATION

Performance-TT67478B-480M

20107002DB

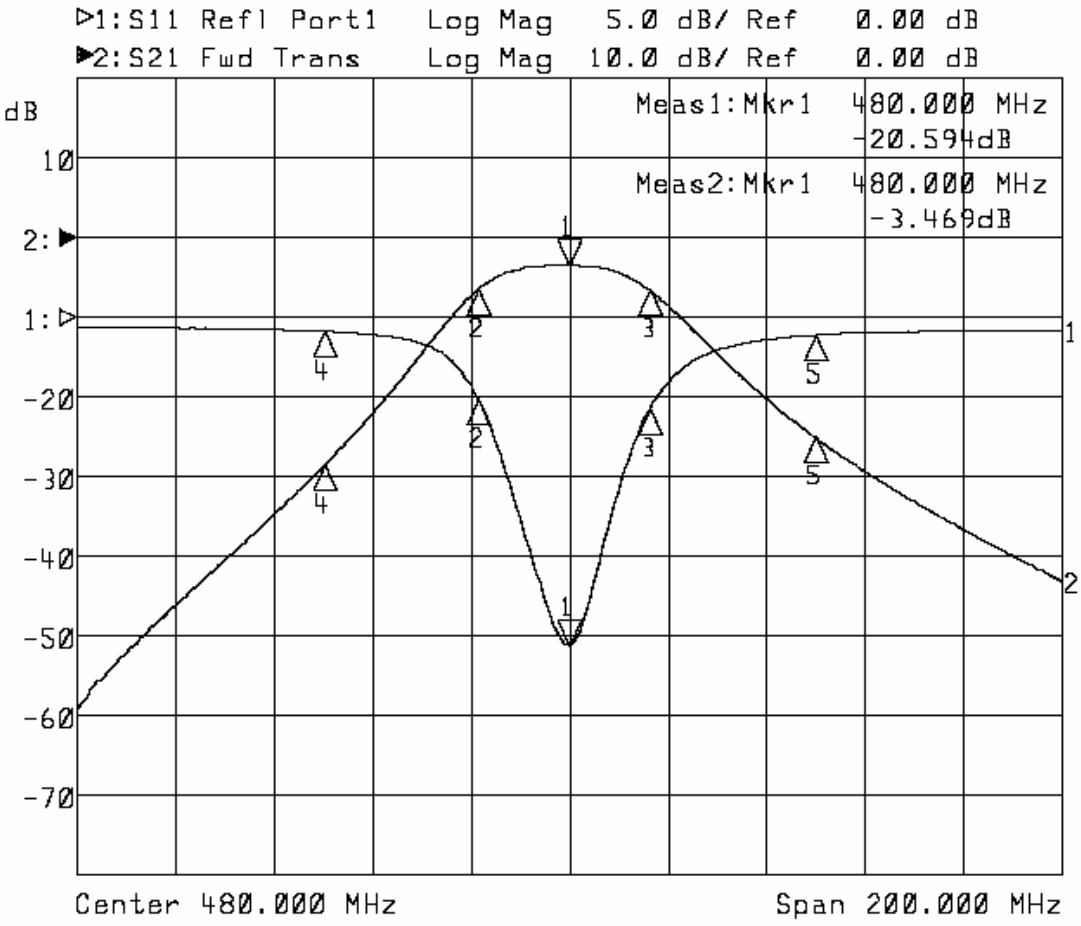

1:Mkr (MHz)	dB	2:Mkr (MHz)	dB
1> 480.0000	-20.594	1> 480.0000	-3.469
2: 461.5667	-5.147	2: 461.5667	-6.433
3: 496.2667	-5.773	3: 496.2667	-6.570
4: 430.3667	-0.907	4: 430.3667	-28.525
5: 530.0000	-1.138	5: 530.0000	-25.094