VHF UHF Helical Filter Specification Sheet

Customer Name		Temwell's Part No.	TF64209B-455M
Approval No. /dated	0707004APR	Acceptable Specify Fo Range	401~455MHz
Work Instruction No.	0707004DB	Date	Jul.12.2007

(1)Pin Position

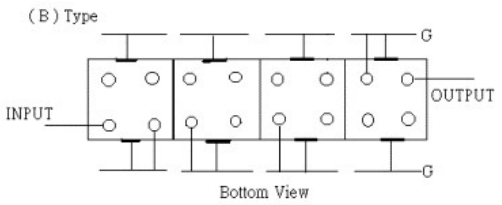

(2)Size Diagram

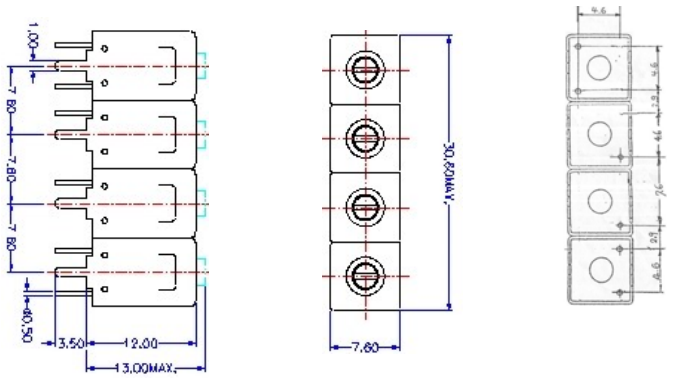

(3)Electric Charasteric

Item		Specify	Performance
Center Freq.(Fo) +/- 0.5 %		455 MHz	455 MHz
Insertion Loss		Typ. 2.0 dB	1.01 dB
-3 dB Bandwidth		Typ. 50 MHz	54.4 MHz
Sensitivity (Attenuation)	Fo - 50 MHz	Typ. 26 dBc	29 dBc
	Fo + 50 MHz	Typ. 18 dBc	21 dBc
	Fo - ( )MHz	Typ. dBc	dBc
	Fo +( )MHz	Typ. dBc	dBc
Return Loss		Min. 12 dB	24.4 dB
Ripple		< 1 dB	dB
Impedance		In / Out : 50 Ω	In / Out : 50 Ω
(4)Torque for Tuning Screw		> 100gf • cm	

(5)Temperature Condition:

Operating Temperature	0℃ ~ +60℃
Storage Temperature	-20℃ ~ +70℃
(6)Input Power	> 1Watt

(7)Measuring Circuit: ※Easy to match Impedance S11/S22 50Ω by parallel with about(0)

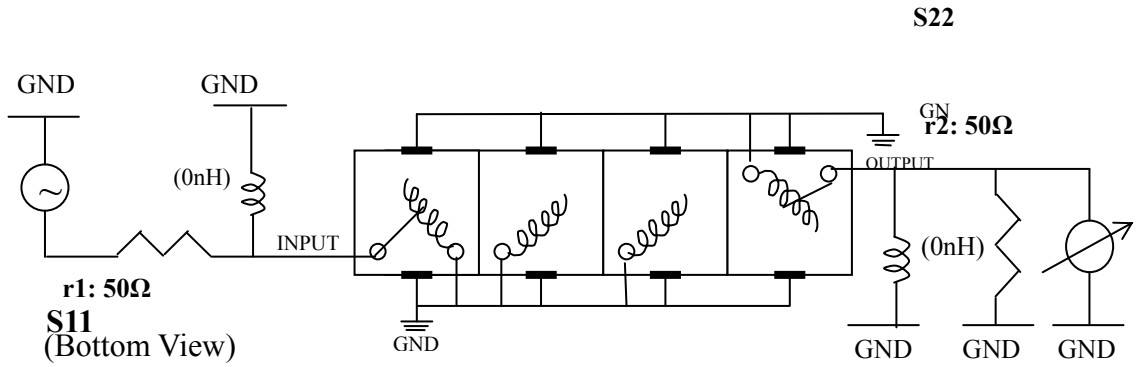

Approval	Supervisor	Designer	Aperture size
C.Y.Chang	C.S.Chang	C.S.Chang	7H4(4*6.5) 7H046RB6.5

TEMWELL CORPORATION

TEMWELL RP:C.S.Chang

Performance-TF64209B-455M

0707004DB

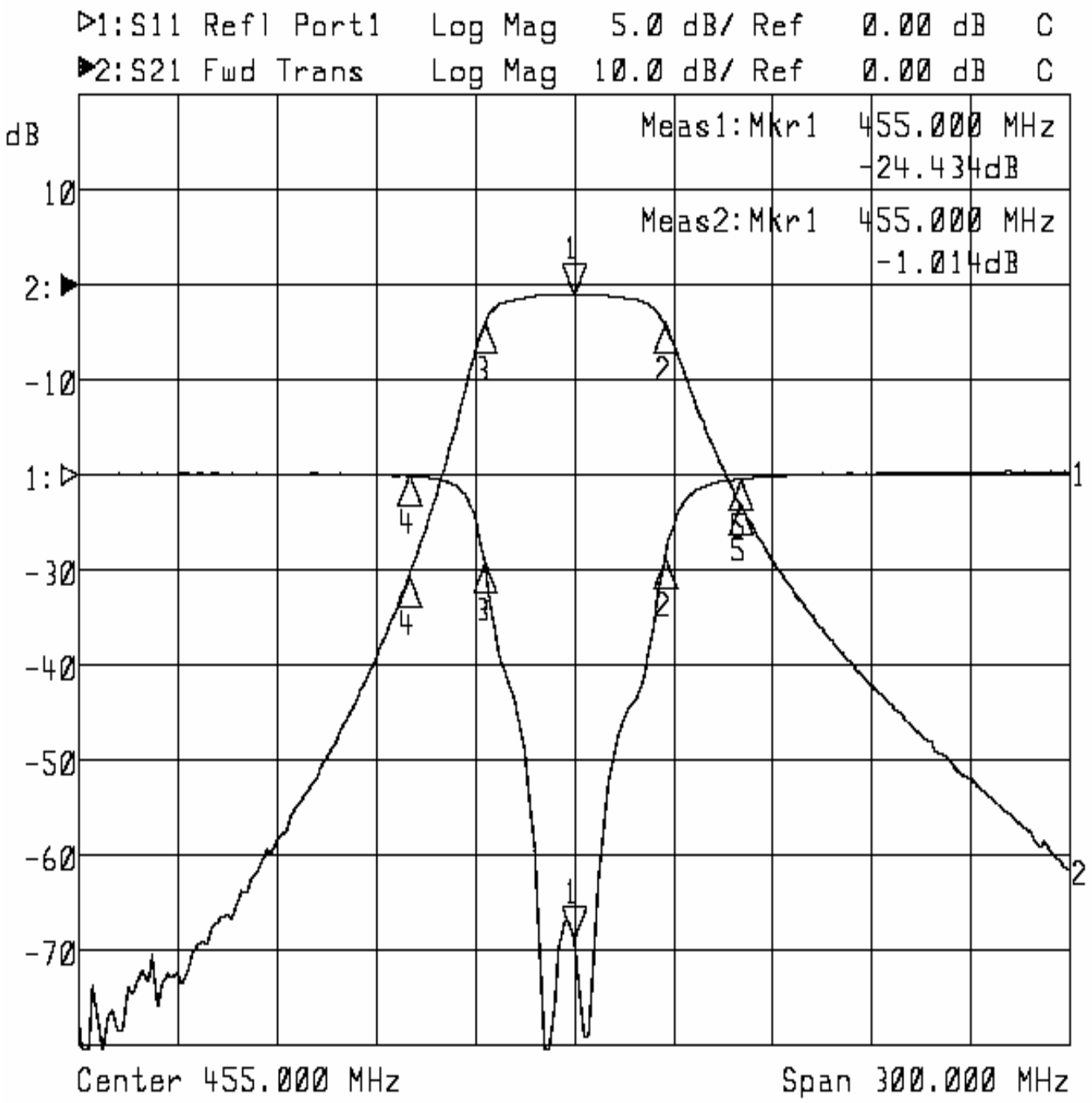

1:Mkr (MHz)	dB	2:Mkr (MHz)	dB
1› 455.0000	-24.434	1› 455.0000	-1.014
2: 482.3000	-4.426	2: 482.3000	-4.059
3: 427.9000	-4.582	3: 427.9000	-4.071
4: 405.0000	-0.055	4: 405.0000	-30.677
5: 505.0000	-0.210	5: 505.0000	-22.884