VHF UHF Helical Filter Specification Sheet

Customer Name		Temwell's Part No.	TV6595F-440M
Approval No. /dated		Temwell's Print Name.	6595F 440M
Work Instruction No.	202008046CD	Date	Nov.05.2020

(1)Pin Position

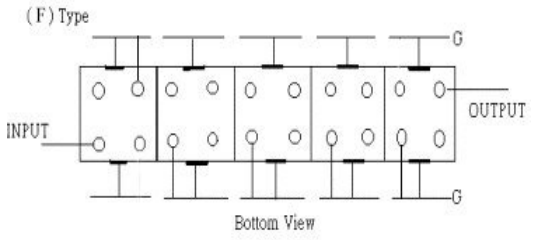

(2)Size Diagram

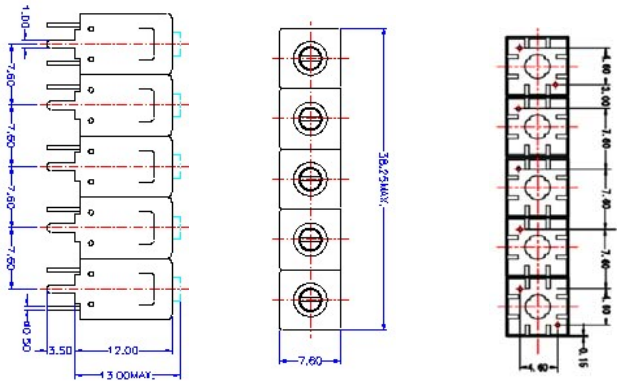

(3)Electric Character

Item		Specify	Performance
Center Freq.(Fo) +/- 0.5 %		440 MHz	440 MHz
Insertion Loss		Typ. 2.0 dB	0.99 dB
-3 dB Bandwidth		Typ. 110 MHz	118.2 MHz
Sensitivity (Attenuation)	Fo - 200 MHz	Typ. 69 dBc	79 dBc
	Fo + 200 MHz	Typ. 39 dBc	44 dBc
	Fo - ( )MHz	Typ. dB	dB
	Fo +( )MHz	Typ. dB	dB
Return Loss		Min. 12 dB	16.5 dB
Ripple		< 1 dB	dB
Impedance		In / Out : 50 Ω	In / Out : 50 Ω
(4)Torque for Tuning Screw		> 60gf • cm	

(5)Temperature Condition:

Operating Temperature	0℃ ~+60℃
Storage Temperature	-20℃ ~+70℃
(6)Input Power	> 1Watt

(7)Measuring Circuit: ※Easy to match Impedance S11/S22 50Ω by parallel with about(- -).

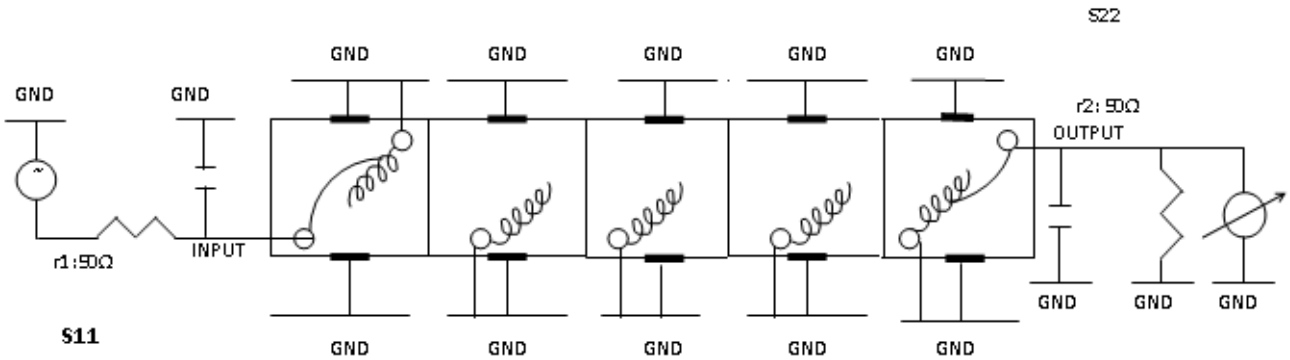

(Bottom View)

Approval	Supervisor	Designer	Aperture size
C.C.Chang	C.K.Chang	W.H.Wang	7H5S(4*8.0)(8.03) 7H046LB6.6(J2)

TEMWELL CORPORATION

Performance-TV6595F-440M
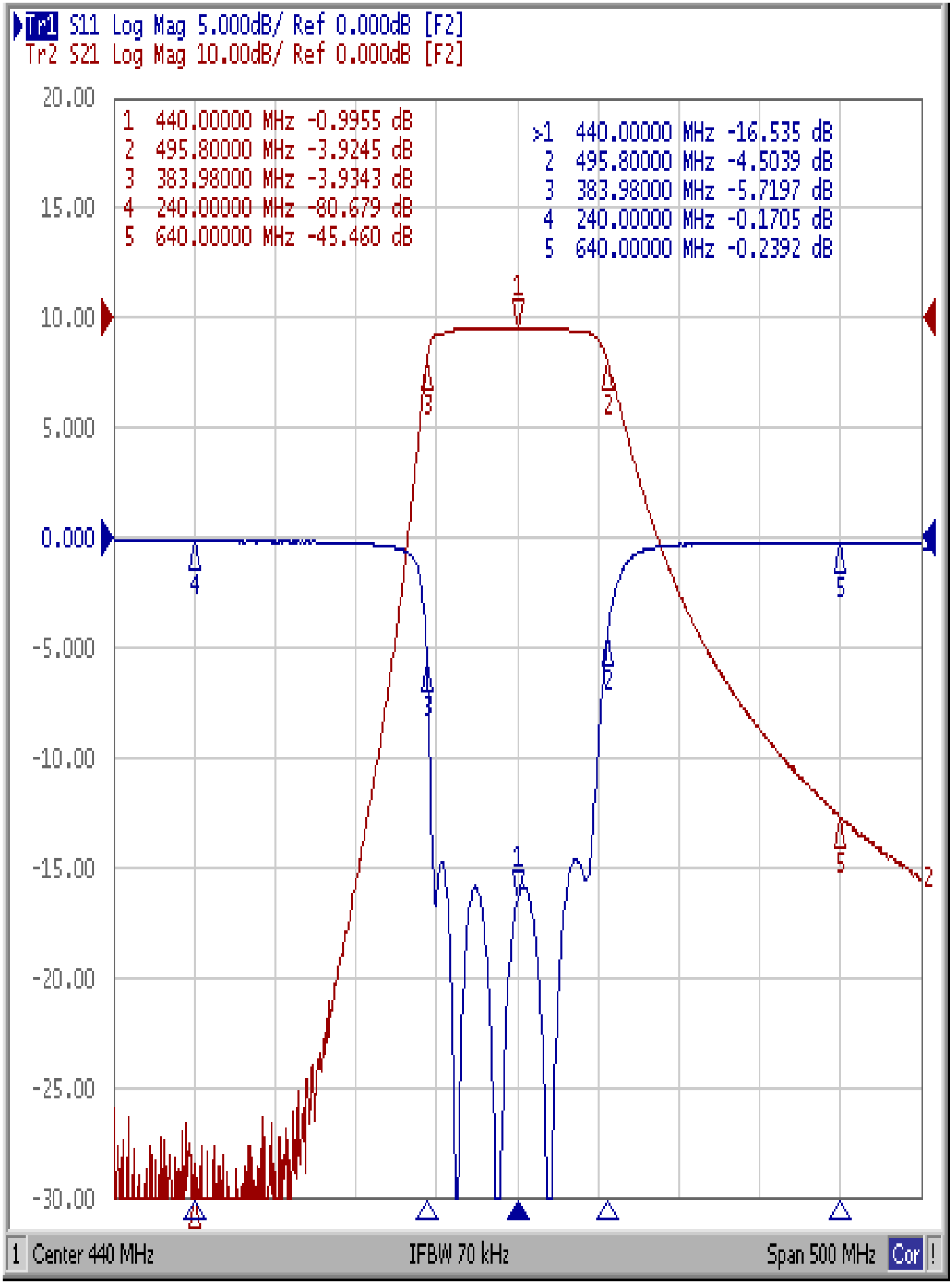
202008046CD